HMT360 Series Intrinsically Safe Humidity and Temperature Transmitters

For operation in up to Zone 0 / 20

Features

- Measures humidity and temperature, outputs also dew point, mixing ratio, absolute humidity and wet bulb temperature
- Intrinsically safe
- Vaisala HUMICAP® Sensor features high accuracy, excellent long-term stability, and negligible hysteresis
- Six probe options
- Traceable calibration (certificate included)

Vaisala HUMICAP® Humidity and Temperature Transmitter Series HMT360 are the ideal solution for measuring humidity in hazardous areas. They operate safely and reliably even in the most hazardous classifications, such as zone 0. The HMT360 transmitters' proven performance and technology conform with rigorous international standards.

Operating Conditions

- Safe operation with the entire transmitter in hazardous areas: Division 1 and 2 (USA, Canada), Categories 1G / Zone 0 and 1D / Zone 20 with protection cover (EU)
- Designed for harsh conditions
- Temperature range between -70 ... +180 °C (-94 ... +356 °F) depending on the probe option

Intrinsically Safe

The entire HMT360 transmitter can be installed directly in explosive areas. It can withstand continuous exposure to potentially explosive environments that contain flammable gases or dust.

Customized Configuration

Due to the options and accessories, the HMT360 series is truly flexible.

Customers may specify the transmitter configuration when ordering the instrument. However, changes in configuration can also easily be made in the field.

Interchangeable Probes

HMT360 offers six probe options for various applications:

- HMT361 - wall mount
- HMT363 - confined spaces
- HMT364 - pressurized spaces
- HMT365 - high temperature
- HMT367 - high humidity
- HMT368 - pressurized pipelines

The interchangeable probes enable fast and easy removal or re-installation when required. Calibration, for example, is easy to perform due to the modular structure. All calibration coefficients are included in the probe unit itself, which means that probes can be switched between transmitter bodies without losing the accuracy.

Optimized Sensors

In addition to the standard Vaisala HUMICAP® Sensor, an application-specific, very chemically durable sensor is also available.

Long-term Solution

The HMT360 transmitters are an investment: their rugged design, combined with trouble-free operation, ensure a long-term solution for monitoring humidity and dew point in explosive environments.

Customized calibration and maintenance contracts for the HMT360 series are available on request.

Interchangeable Probes for HMT360 Intrinsically Safe Humidity and Temperature Transmitter

HMT361 for Wall Mounting

Temperature range	-40 ... +60 °C (-40 ... +140 °F)
Probe diameter	12 mm (0.47 in)

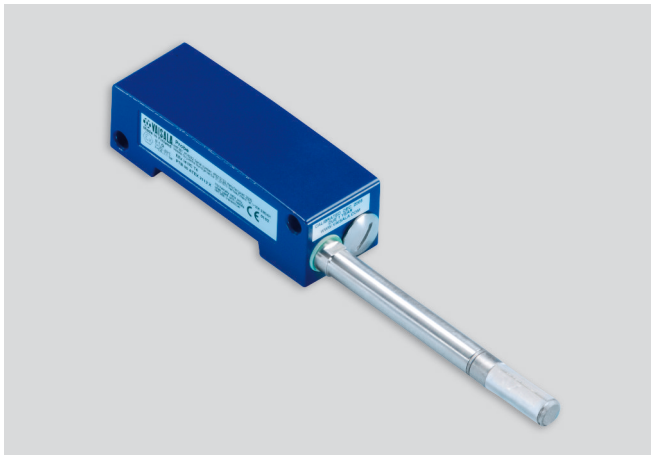

The HMT361 probe in this picture has a stainless steel netting filter.

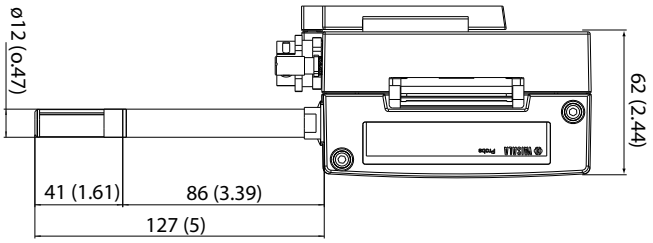

Dimensions in mm (inches)

HMT363 for Confined Spaces

Temperature range with teflon cable	-40 ... +120 °C (-40 ... +248 °F)
Temperature range with rubber cable	-40 ... +80 °C (-40 ... +176 °F)
Probe cable length	2, 5 or 10 meters (6 ft 7 in, 16 ft 5 in, 32 ft 10 in)
Probe diameter	12 mm (0.47 in)
Installation	
Duct installation kit	210697
Cable Gland M20x1.5 with splitting seal	HMP247CG
Swagelok for 12mm probe, 1/2" NPT thread	SWG12NPT12

The HMT363 probe is small and fits into tight spaces. This one is connected with a teflon cable.

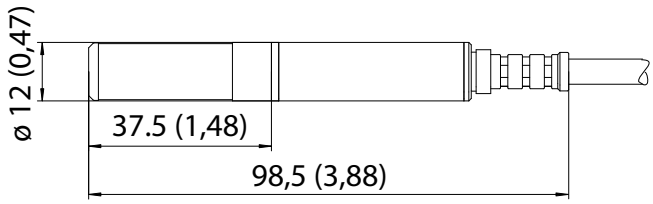

Dimensions in mm (inches)

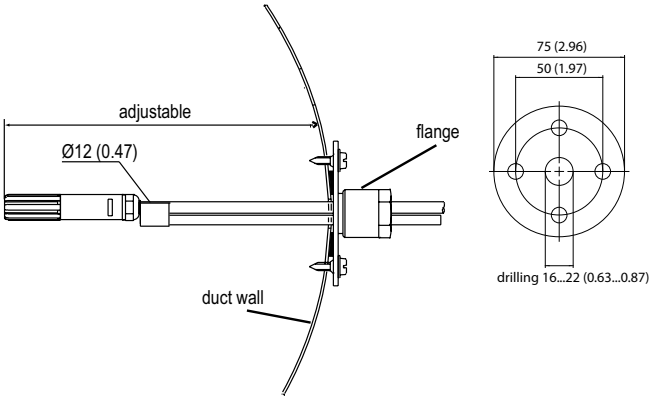

Left: Installation kit for duct mounting. Right: Installation flange. Aluminum or stainless steel.

HMT364 for High Pressure

Temperature range	-70 ... +180 °C (-94 ... +356 °F)
Pressure range	0 ... 10 MPa
Probe cable length	2, 5 or 10 meters (6 ft 7 in, 16 ft 5 in, 32 ft 10 in)
Probe diameter	12 mm (0.47 in)
Fitting body M22x1.5	17223
Fitting body NPT1/2	17225

The HMT364 probe is designed for measurement in pressurized spaces or vacuum chambers.

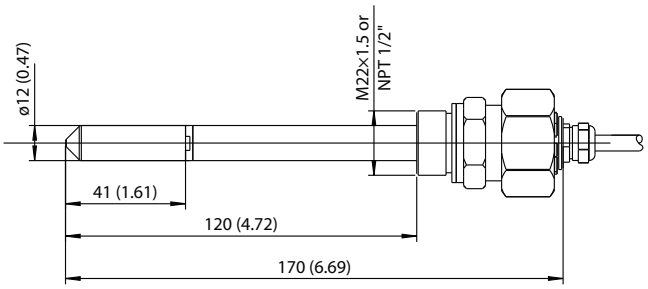

Dimensions in mm (inches)

HMT365 for High Temperature

Temperature range	-70 ... +180 °C (-94 ... +356 °F)
Probe cable length	2, 5 or 10 meters (6 ft 7 in, 16 ft 5 in, 32 ft 10 in)
Probe diameter	13.5 mm (0.53 in)
Installation	
Mounting flange	210696
Cable Gland M20x1.5 with splitting seal	HMP247CG

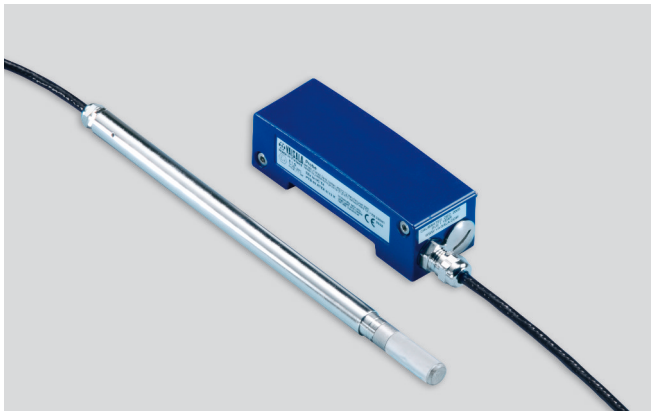

The HMT365 probe is designed for high temperature environments.

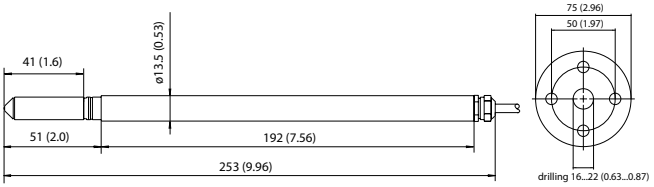

HMT365 probe and stainless steel installation flange. Dimensions in mm (inches).

HMT367 for High Humidities

Temperature range	-70 ... +180 °C (-94 ... +356 °F)
Probe cable length	2, 5 or 10 meters (6 ft 7 in, 16 ft 5 in, 32 ft 10 in)
Probe diameter	12 mm (0.47 in)
Installation	
Duct installation kit	210697
Cable Gland M20x1.5 with splitting seal	HMP247CG
Swagelok for 12 mm probe, 3/8" ISO thread	SWG12ISO38
Swagelok for 12 mm probe, 1/2" NPT thread	SWG12NPT12

The HMT367 probe is constructed to be installed in environments with high humidities.

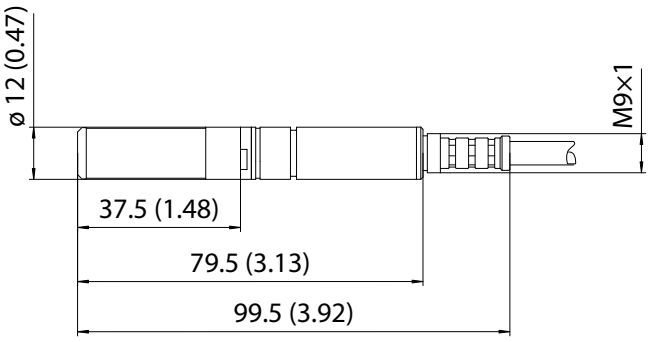

Dimensions in mm (inches)

HMT368 for Pressurized Pipelines

Temperature range	-70 ... +180 °C (-94 ... +356 °F)
Pressure range	0 ... 4 MPa
Probe cable length	2, 5 or 10 meters (6 ft 7 in, 16 ft 5 in, 32 ft 10 in)
Probe diameter	13.5 mm/12 mm (0.53 in/0.47 in)
Available probe lengths	226 mm/448 mm (8.90 in/17.6 in)
Installation	
Fitting body ISO1/2 solid structure	DRW212076SP
Fitting body NPT1/2 solid structure	NPTFITBODASP
Ball valve ISO 1/2 with welding joint	BALLVALVE-1

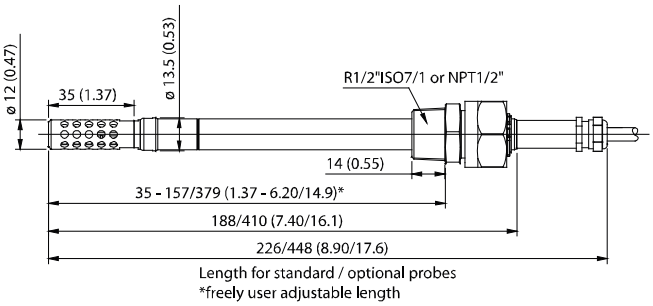

Dimensions in mm (inches)

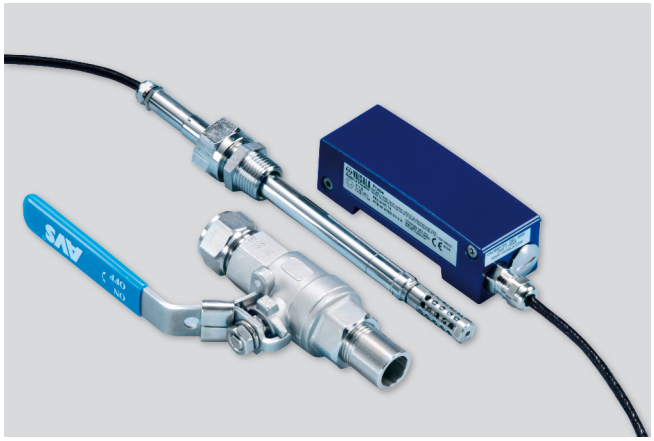

The HMT368 probe enables flexible installation in pressurized pipelines.

HMT360 Series Technical Data

Measurement Performance

Relative Humidity	
Measurement range	0 ... 100 %RH
Accuracy (Including Non-linearity, Hysteresis, and Repeatability):	
With Vaisala HUMICAP® 180R	For typical applications
At +15 ... +25 °C (59 ... +77 °F)	± 1.0 %RH (0 ... 90 %RH) ±1.7 %RH (90 ... 100 %RH)
At -20 ... +40 °C (-4 ... +104 °F)	±(1.0 + 0.008 x reading) %RH
At -40 ... +180 °C (-40 ... +356 °F)	± (1.5 +0.015 x reading) %RH
Factory calibration uncertainty (+20 °C) (Defined as ±2 standard deviation limits. Small variations possible, see also calibration certificate.)	± 0.6 %RH (0 ... 40 %RH) ± 1.0 %RH (40 ... 97 %RH)
Response Time (90 %) at +20 °C (+68 °F) in Still Air:	
With grid filter	17 s
With grid + steel netting filter	50 s
With sintered filter	60 s
Temperature	
Measurement range	-70 ... +180 °C (-94 ... +356 °F) (depends on selected probe)
Typical accuracy of electronics at +20 °C (+68 °F)	±0.2 °C (0.36 °F)
Typical temperature dependence of electronics	0.005 °C/°C (0.005 °F/°F)
Sensor	Pt1000 RTD Class F0.1 IEC 60751

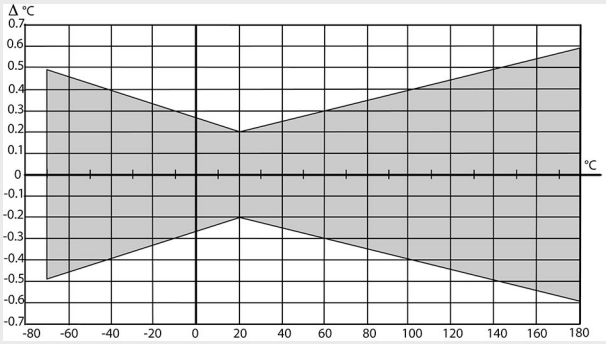

Accuracy over Temperature Range

Other Variables	
Optionally available	Dew point temperature, mixing ratio, absolute humidity, wet bulb temperature

Operating Environment

Operating temperature for electronics	-40 ... +60 °C (-40 ... +140 °F)
Operating temperature with display	-20 ... +60 °C (-4 ... +140 °F)
Storage temperature	-40 ... +70 °C (-40 ... +158 °F)
Pressure range	See probe specifications
EMC compliance	EN61326-1, Industrial Environment **Note 1** IEC 61000-4-5 complies only when using external EXi approved surge arrester in the safe area. **Note 2** IEC 61000-4-3 within frequency range 80 ... 200 MHz immunity is 4 V/m.

Inputs and Outputs

Operating voltage	12 ... 28 V
With serial port (service mode)	15 ... 28 V
Analog outputs	Two-wire 4 ... 20 mA, one standard, one optional Connection via safety barriers
Typical accuracy of analog outputs at +20 °C	±0.05 % full scale
Typical temperature dependence of analog outputs	0.005 % / °C (0.005 % / °F) full scale
RS-232C serial output for service use (requires cable accessory 25905ZZ)	Connector type RJ45
Display	Two-line LCD

Mechanical Specifications

Connections	Screw terminals, 0.33 ... 2.0 mm 2 wires (AWG 14-22)
Cable bushings	For 7.5 ... 12 mm or 10 ... 15 mm cable diameters (M20)
Conduit fitting	NPT 1/2"
Housing material	G-AlSi10Mg (DIN 1725)
Housing weight	950 g (2.1 lb)

Compliance

IP rating	IP66 (NEMA4X)

Accessory Availability

Accessory	Part number	Models
Ball valve ISO 1/2 with welding joint Pressure range at +20 °C (+68 °F) 0 ... 20 bar (0 ... 290 psia) (during installation max. 10 bar (145 psia)	BALLVALVE-1	HMT368
Cable Gland M20 x 1.5 with splitting seal	HMP247CG	HMT363, HMT365, HMT367
Duct installation kit	210697	HMT363, HMT367
Fitting body ISO1/2 solid structure	DRW212076SP	HMT368
Fitting body M22 x 1.5	17223	HMT364
Fitting body NPT1/2	17225	HMT364
Fitting body NPT1/2 solid structure	NPTFITBODASP	HMT368
Mounting flange	210696	HMT365
Swagelok for 12mm probe, 1/2" NPT thread	SWG12NPT12	HMT363, HMT367
Swagelok for 12mm probe, 3/8" ISO thread	SWG12ISO38	HMT363, HMT367
Galvanic isolator	212483	All models
Zener barrier	210664	All models
Calibration adapter for HMK15	211302	HMT361, HMT363, HMT364, HMT367
Serial interface cable for PC connectors RJ45 - D9 female	25905ZZ	All models
Protection cover (for use in the presence of combustible dust, ATEX)	214101 II 1 D IP65 T = 80 °C	All models

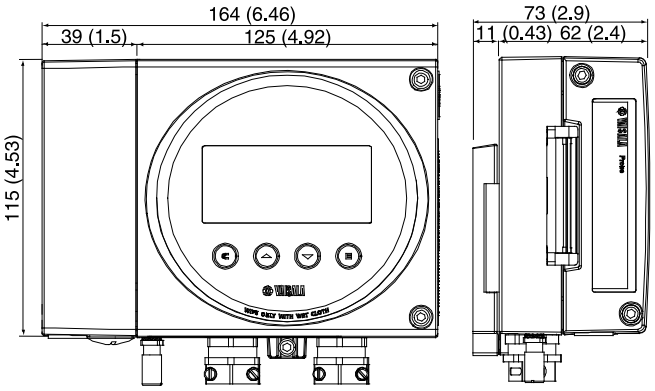

Dimensions in mm (inches)

Classification with Current Outputs

Europe / VTT	
EU (94/9/EC, ATEX100a)	II 1 G Ex ia IIC T4 Ga Certificate No. VTT 09 ATEX 028 X
Safety factors	U_i = 28 V, I_i = 100 mA, P_i = 700 mW C_i = 1 nF, L_i negligibly low
Environmental specifications	
T_{amb}	-40 ... +60 °C (-40 ... +140 °F)
P_{amb}	0.8 ... 1.1 bar
Dust classification (with protection cover)	II 1 D (IP65 T=70 °C) VTT 04 ATEX 023X
USA (FM)	Classes I, II, III, Division 1, Groups A-G and Division 2, Groups A-D, F and G FM Project ID: 3010615
Safety factors	V_{max} = 28 VDC, I_{max} = 100 mA, C_i = 1 nF, L_i = 0, P_i = 0.7 W, T_{amb} = 60 °C (140 °F), T5
Japan (TIIS)	Ex ia IIC T4 Code number: TC20238
Safety factors	U_i = 28 VDC, I_i = 100 mA, C_i = 1 nF, P_i = 0.7 W, L_i = 0, T_{amb} = 60 °C (140 °F)
Canada (CSA)	
Class I	Division 1 and Division 2, Groups A, B, C, D
Class II	Division 1 and Division 2, Groups G and Coal Dust
Class III	CSA File No: 213862 0 000, CSA Report: 1300863
Safety factors	T_{amb}= 60 °C, T4 Intrinsically safe when connected as per Installation Drawing DRW213478.
China (PCEC)	Ex ia II CT4 Certificate No. CE092145 Standard GB3836.1-2000 and GB3836.4-2000
IECEx (VTT)	Ex ia IIC T4 Ga Certificate No. IECEx VTT 09.0002x
Safety factors	U_i = 28 V, I_i = 100 mA, P_i = 700 mW C_i = 1 nF, L_i negligibly low
Environmental specifications	
T_{amb}	-40 ... +60 °C (-40 ... +140 °F)
P_{amb}	0.8 ... 1.1 bar
EAC (Russia, Kazakhstan, Belarus) (T RCU)	0Ex ia IIC T4 Ga X Certificate No. RU C-FI.МЩ06.B. 00068
Environmental specifications	
T_{amb}	-40 ... +60 °C (-40 ... +140 °F)
P_{amb}	0.8 ... 1.1 bar
Korea (KOSHA)	Ex ia IIC T4 Certificate No. 17-AV4BO-0419X
Safety factors	Ui = 28 V, Ii = 100 mA, Pi = 700 mW Ci = 1 nF, Li = negligibly low
Environmental specifications	
T_{amb}	-40 ... +60 °C (-40 ... +140 °F)
P_{amb}	0.8 ... 1.1 bar

Published by Vaisala | B210956EN-G © Vaisala 2017

VAISALA

www.vaisala.com

All rights reserved. Any logos and/or product names are trademarks of Vaisala or its individual partners. Any reproduction, transfer, distribution or storage of information contained in this document is strictly prohibited. All specifications — technical included — are subject to change without notice.